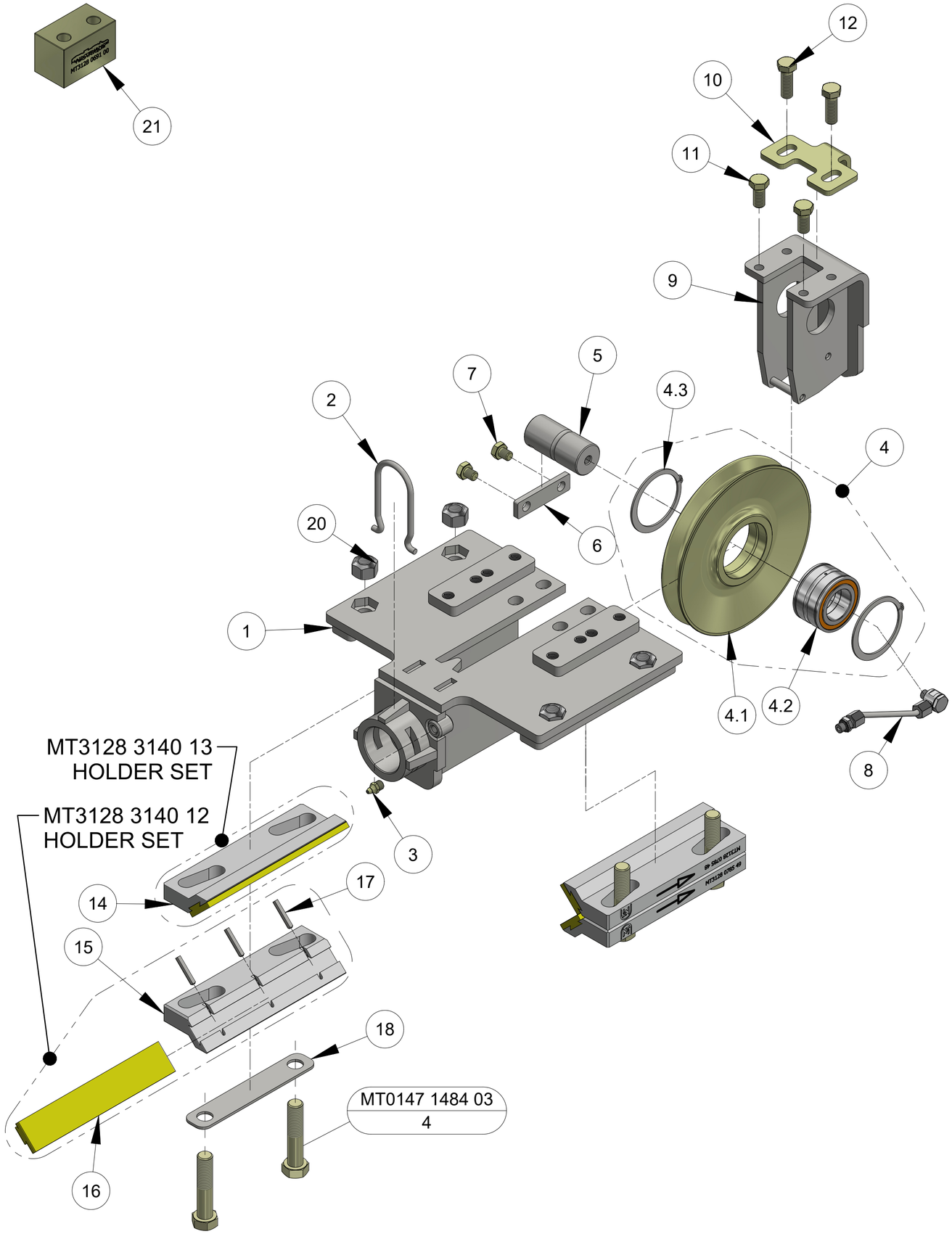

ITEM	PART NUMBER	DESCRIPTION	QTY	COMMENTS
1	MT3128 0015 48	CRADLE PLATE	1	
2	MT3128 3249 92	SPRING LOCK	1	
3	MT0544 2162 00	GREASE NIPPLE	1	
4	MT3128 0785 348	PULLEY WHEEL COMPL.	1	
4.1	MT3128 0785 34	PULLEY WHEEL	1	
4.2	MT3128 0784 27	ROLLER BEARING	1	
4.3	MT0335 1152 00	EXTERNAL CIRCLIP	2	
5	MT3128 0481 00	SHAFT	1	
6	MT3128 0476 00	WASHER PLATE	1	
7	MT0147 1357 03	SCREW	2	
8	MT3128 3255 19	HOSE NIPPLE SET	1	
9	MT3128 3259 57	SCRAPER	1	
10	MT3128 0013 97	STRIKER PLATE	1	
11	MT0147 1400 03	SCREW	2	
12	MT0147 1217 50	SCREW	2	
13	MT3315 0195 08	LOCK WASHER	4	
14	MT3128 0785 49	SLIDE HOLDER LH	2	
15	MT3128 0785 48	SLIDE HOLDER RH	2	
16	MT3128 3039 30	NYLON SLIDE SOFT	4	YELLOW
16.1	MT3128 3039 31	NYLON SLIDE MID	0	BLUE
16.2	MT3128 3074 88	NYLON SLIDE HARD	0	GREY
17	MT3128 0619 00	SLIDE KEY	12	
18	MT3128 3252 84	WASHER PLATE	2	
19	MT0147 1484 03	BOLT	4	
20	MT0291 1128 25	LOCK NUT	4	

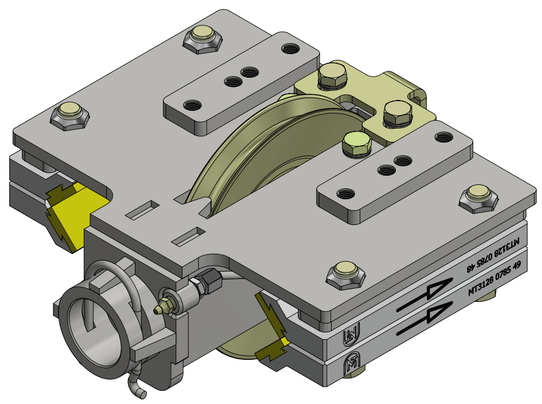

PART NUMBER
MT3128 0015 47

DESCRIPTION
CRADLE SET (v02)

MAINTENANCE TECHNIQUE
MT Parts: 0407 059 610
1 Hahesy Circuit, Roseworthy S.A. 5371
171 Dugan Street, Kalgoorlie W.A. 6430
parts@mtunderground.com
www.mtunderground.com

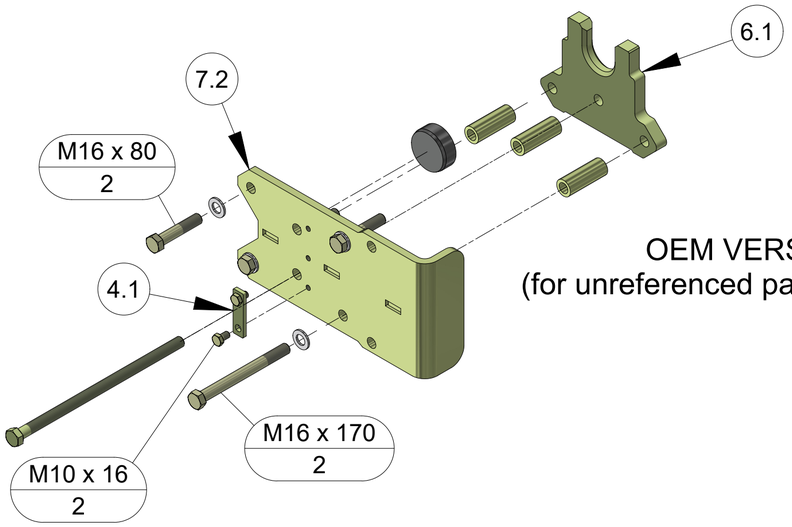

OEM VERSION
(for unreferenced parts see below)

ITEM	PART NUMBER	DESCRIPTION	QTY	COMMENTS
1	MT0113 3238 00	PIN	1	Includes washer & split pin
2	MT0147 1958 29	SET SCREW	1	
3	MT3125 0639 00	BUFFER - REAR	1	
4	MT3128 0476 0R	WASHER PLATE	1	
4.1	MT3128 0476 00	WASHER PLATE	0	OEM
5	MT3128 3051 75	PIPE	4	OEM QTY=3
6	MT3128 3051 7R	END PIECE	1	
6.1	MT3128 3051 71	END PIECE	0	OEM
7	MT3128 3150 3L	BACK HEAD 6000 LH	1	
7.1	MT3128 3150 3R	BACK HEAD 6000 RH	0	
7.2	MT3128 3150 39	BACK HEAD	0	OEM
8	MT3128 3051 8S	SPACER	1	
9	MT3222 3097 50	ROPE LADDER	1	
10	MT3128 3150 3BK	BOLT KIT	1	
11	MT3128 3150 39BK	BOLT KIT	0	OEM

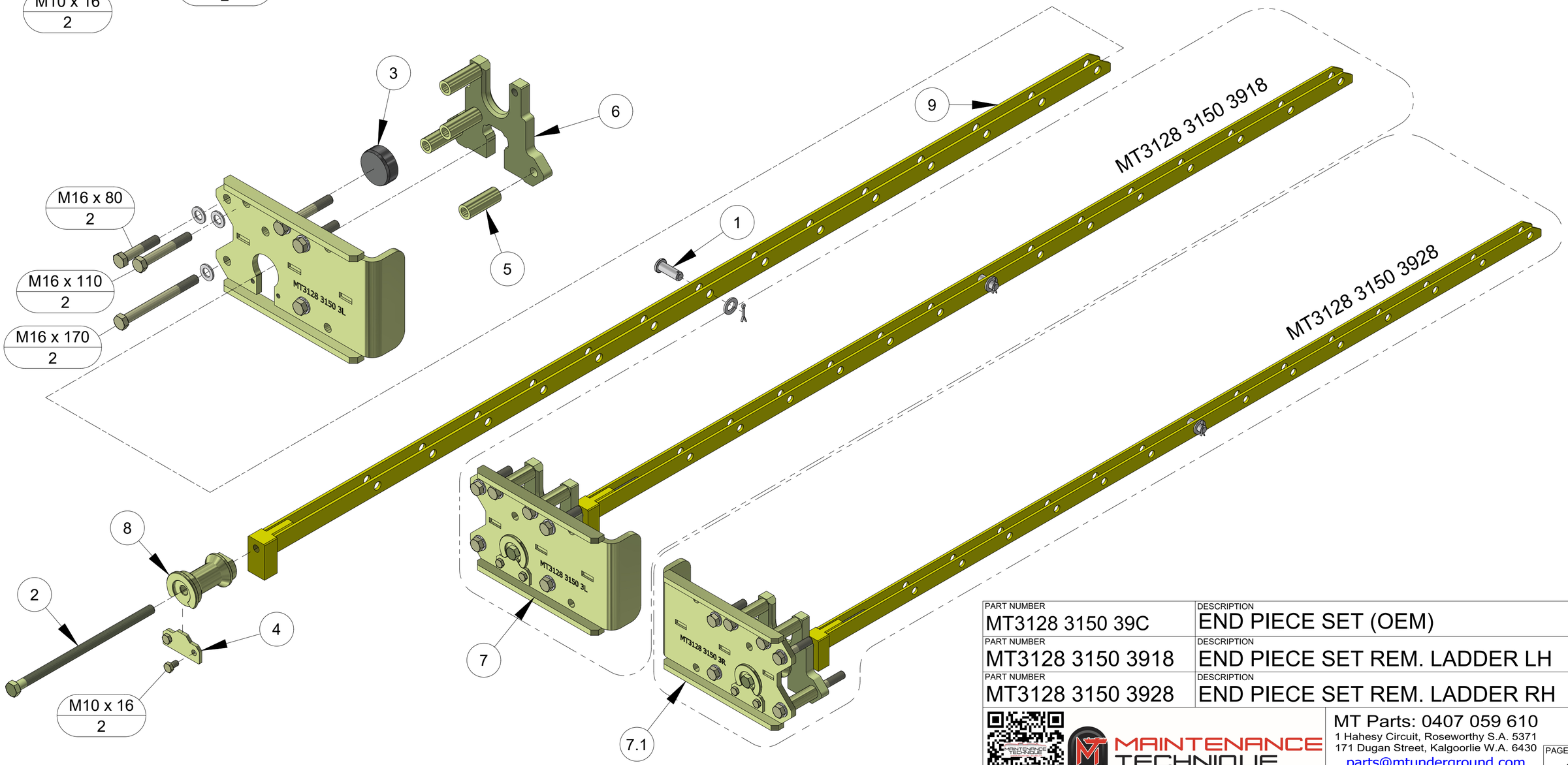

PART NUMBER	DESCRIPTION
MT3128 3150 39C	END PIECE SET (OEM)
MT3128 3150 3918	END PIECE SET REM. LADDER LH
MT3128 3150 3928	END PIECE SET REM. LADDER RH

MAINTENANCE TECHNIQUE
MT Parts: 0407 059 610
1 Hahesy Circuit, Roseworthy S.A. 5371
171 Dugan Street, Kalgoorlie W.A. 6430
parts@mtunderground.com
www.mtunderground.com

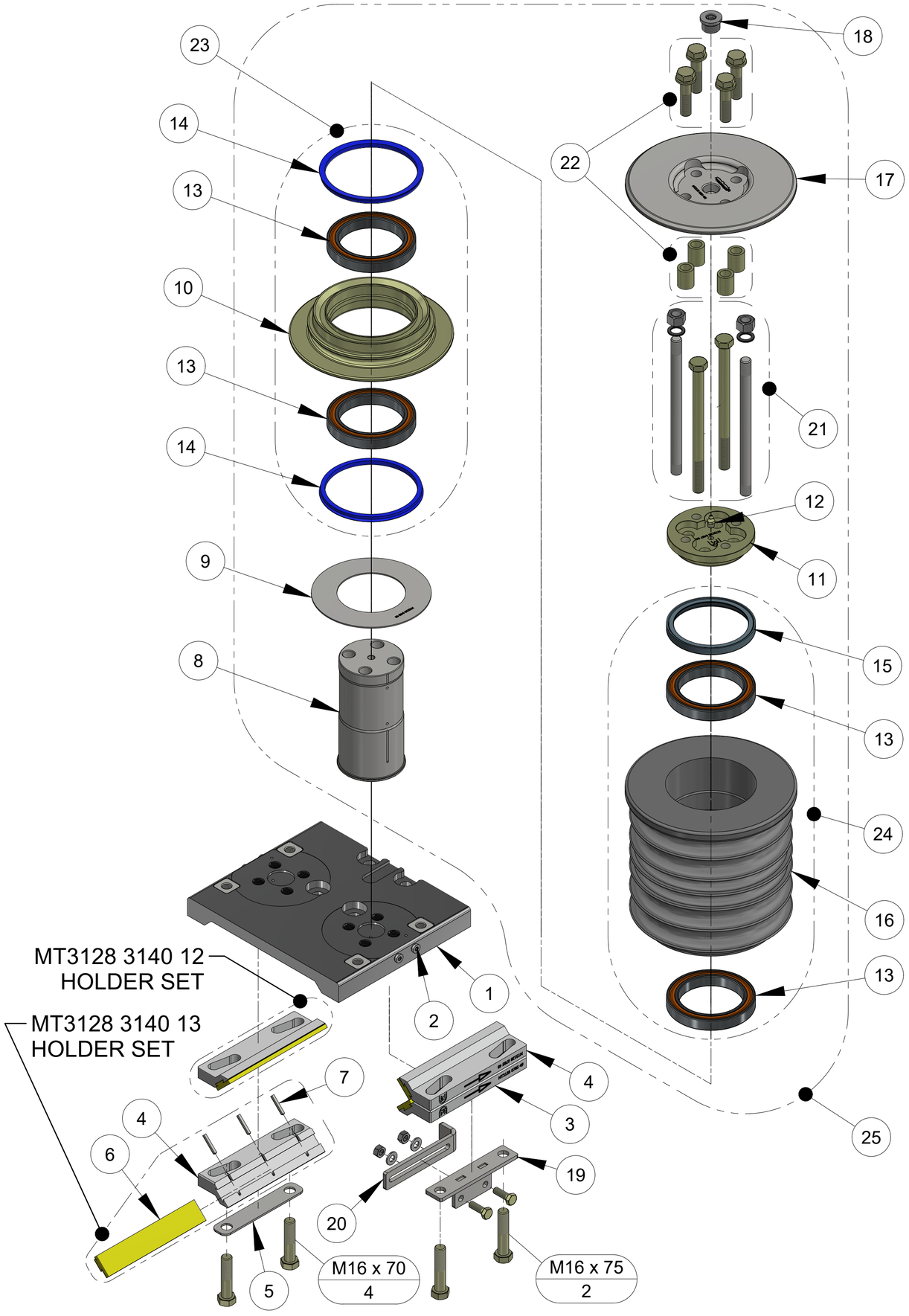

ITEM	PART NUMBER	DESCRIPTION	QTY	COMMENTS
1	MT3128 0014 70	CRADLE PLATE	1	
2	MT0686 3718 05	Socket Plug BSPP 1/8"	4	
3	MT3128 0785 49	SLIDE HOLDER LH	2	
4	MT3128 0785 48	SLIDE HOLDER RH	2	
5	MT3128 3252 84	WASHER PLATE	2	
6	MT3128 3039 30	NYLON SLIDE SOFT	4	YELLOW
6.1	MT3128 3039 31	NYLON SLIDE MID	0	BLUE
6.2	MT3128 3074 88	NYLON SLIDE HARD	0	GRAY
7	MT3128 0619 00	SLIDE KEY	12	
8	MT3128 0004 201	SHAFT	1	
9	MT3128 0485 00	DISC	1	
10	MT3128 0004 231	PULLEY WHEEL	1	
11	MT3128 0497 00	CAP	1	
12	MT0544 2162 00	1/8" BSP GREASE NIPPLE	1	
13	MT3128 0475 105	HOSE REEL BEARING	4	
14	MT0666 8007 04	SEAL	2	
15	MT0666 6718 00	RADIAL LIP SEAL	1	
16	MT3128 0004 25	HOSE DRUM	1	
17	MT3128 0054 491	DRUM PROTECTION	1	
18	MT0686 3718 50	PLUG (3/4" BSPP)	1	
19	MT3128 0710 00	BRACKET	1	incl. NUTS & BOLTS
20	MT3128 0711 00	ANGLE	1	
21	MT3128 3141 059	BOLT KIT	1	
22	MT3128 0054 499	SPACER KIT	1	
23	MT3128 0004 205	SHAFT WEAR KIT	1	
24	MT3128 0004 255	HOSE DRUM WEAR KIT	1	
25	MT3128 0004 212	HOSE DRUM SHAFT KIT	1	

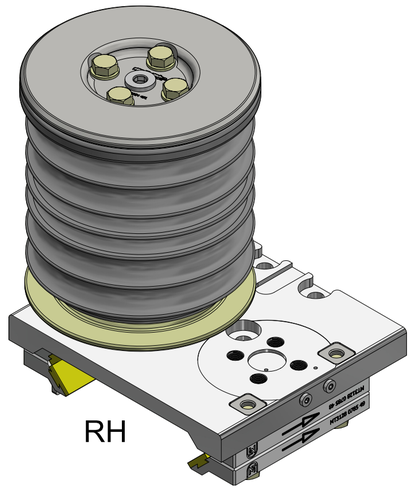

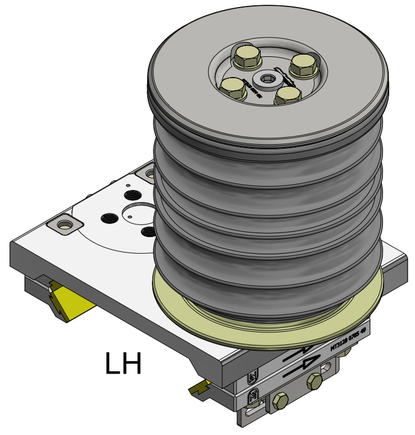

PART NUMBER
MT3128 0004 258

DESCRIPTION
LH HOSE DRUM COMPLETE

MAINTENANCE TECHNIQUE

MT Parts: 0407 059 610
1 Hahesy Circuit, Roseworthy S.A. 5371
171 Dugan Street, Kalgoorlie W.A. 6430
parts@mtunderground.com
www.mtunderground.com